AC Motor Brakes

F Series
- 3 Ft-Lb
- 6 Ft-Lb
- 10 Ft-Lb
- 15 Ft-Lb

AC Rear Mounted Brake

Nema 2 Housing

- Factory Assembled and Tested
- Manual Release
- AC Power Off
- Rear Mounted
- Cast Iron Head
- Steel Cover

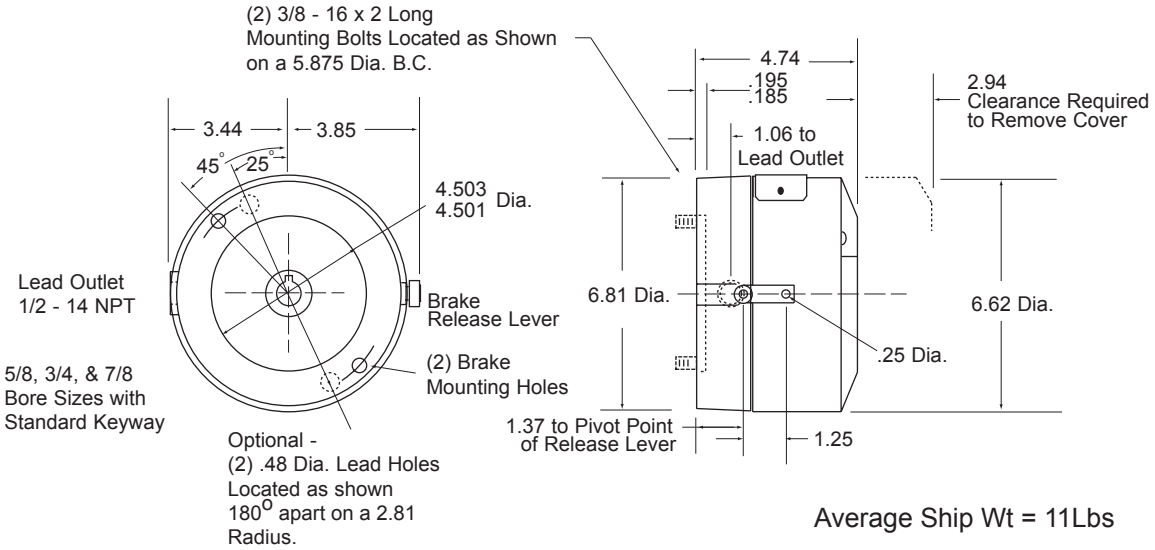

Average Ship Wt = 11Lbs

Brake Part Numbers

Coil Voltage	5/8 Bore Hub			
	3 Ft. Lb. Brakes	6 Ft. Lb. Brakes	10 Ft. Lb. Brakes	15 Ft. Lb. Brakes
115/230, 60HZ	F51A7321	F52A7621	F52A7721	F53A7821
230/460, 60 HZ	F51A7324	F52A7624	F52A7724	F53A7824
287/575, 60 HZ	F51A7325	F52A7625	F52A7725	F53A7825
115/230, 50HZ	F51A7328	F52A7628	F52A7728	F53A7828
230/460, 50 HZ	F51A7329	F52A7629	F52A7729	F53A7829

Coil Voltage	3/4 Bore Hub			
	3 Ft. Lb. Brakes	6 Ft. Lb. Brakes	10 Ft. Lb. Brakes	15 Ft. Lb. Brakes
115/230, 60HZ	F51B7321	F52B7621	F52B7721	F53B7821
230/460, 60 HZ	F51B7324	F52B7624	F52B7724	F53B7824
287/575, 60 HZ	F51B7325	F52B7625	F52B7725	F53B7825
115/230, 50HZ	F51B7328	F52B7628	F52B7728	F53B7828
230/460, 50 HZ	F51B7329	F52B7629	F52B7729	F53B7829

Coil Voltage	7/8 Bore Hub			
	3 Ft. Lb. Brakes	6 Ft. Lb. Brakes	10 Ft. Lb. Brakes	15 Ft. Lb. Brakes
115/230, 60HZ	F51C7321	F52C7621	F52C7721	F53C7821
230/460, 60 HZ	F51C7324	F52C7624	F52C7724	F53C7824
287/575, 60 HZ	F51C7325	F52C7625	F52C7725	F53C7825
115/230, 50HZ	F51C7328	F52C7628	F52C7728	F53C7828
230/460, 50 HZ	F51C7329	F52C7629	F52C7729	F53C7829

Technical Data

60 HZ Brake Coils Single Phase			50HZ Brake Coils Single Phase		
Voltage	Current Holding Amps	Current Inrush Amps	Voltage	Current Holding Amps	Current Inrush Amps
115/230	.50/.25	3.66/1.83	115/230	.45/.22	3.27/1.64
230/460	.28/.14	1.94/.97	230/460	.24/.12	1.76/.88
287/575	.22/.11	1.54/.77			

Static Torque Ft. Lb.	Number Discs
3	1
6	2
10	2
15	3